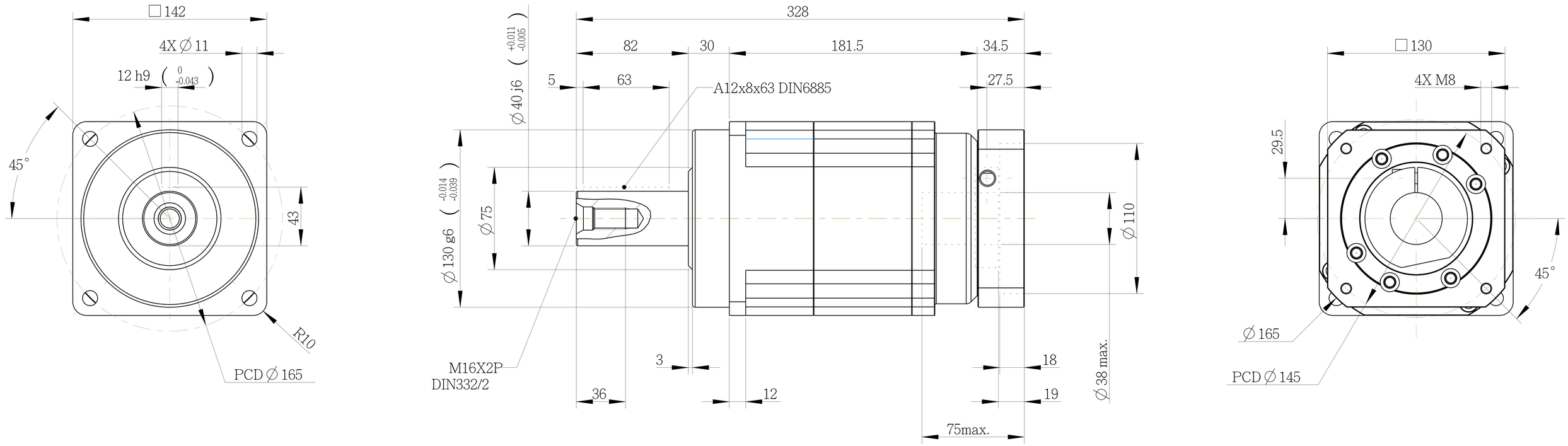

INERTIA: 7.03~9.21kg-cm^2
MASS: 20.2kg

SHAFT OPTION S1: SMOOTH OUTPUT SHAFT(STANDARD)
SHAFT OPTION S2: OUTPUT SHAFT WITH KEYWAY
MICRO BACKLASH<= 3arcmin
REDUCED BACKLASH<= 5arcmin
STANDARD BACKLASH<= 7arcmin

BUSHING SUPPLIED WHEN MOTOR SHAFT DIAMETER SMALL THAN ∅38

PART NO. AF140A2-P0403500101 AF140A-2, AD-P140-M130-1		APEX DYNAMICS, INC.
APPROVALS	DATE	TITLE AF140A 2 STAGES AND MOTOR FLANGE MOUNTING
DRAWN Cindy		
CHECKED		DWG NO. AF140A2-P0403500101
APPROVED		SIZE A0 / SCALE 1:1 / REV 3.0

AF140A-012 - S2 - P2 / MITSUBISHI HG-SR102